LEGENDA CONNETTORI

j1 = Conn. vaschetta 2 vie RST 5 94535-7002
j2 = Conn. vaschetta 2 vie RST 5 284472-1
j3 = Conn. vaschetta 6 vie RST 5 284476-1
j4 = Conn. vaschetta 7/4 vie RST 5 (opzionale conn. 5/3) 284475-1 / 284473-1
j5 = Conn. 2 vie RST 5 94535 - 7002
j8 = Conn. 12 vie EDG RST 2,5 1-51122-12
j9 = Conn. 9 vie EDG RST 5 284489-1
j10 = Conn. 8 vie EDG RST 2,5 01-51122-08
j11 = Conn. 5 vie EDG RST 2,5 01-51122-05
j14 = Conn. 3 vie EDG RST 2,5 1-1355181-2
j15 = Conn. 5 vie vaschetta RST 2,5 01-51122-05
j16 = Conn. 3 vie vaschetta RST 2,5 3-819868-3
j17 = Conn. 6 vie vaschetta RST 2,5
j18 = Conn. 12 vie EDG RST 2,5 1-51122-12
j19 = Conn. vaschetta 5 vie RST 2,5 1-1355181-6

* = Conn. 3 vie vaschetta RST 2,5 3-829868-3
! = Conn. 3 vie EDG RST 2,5 1-1355181-2

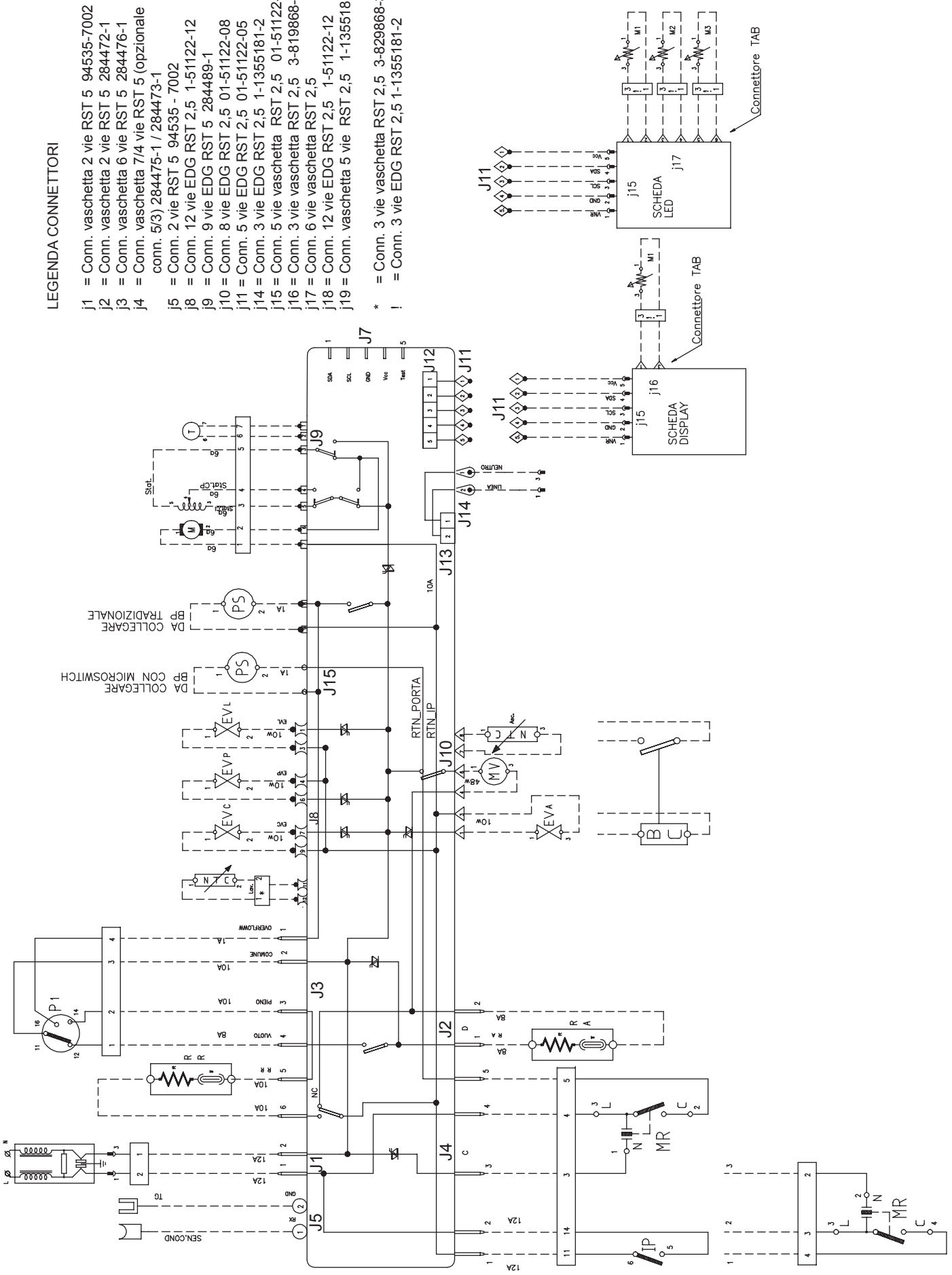

MODULO EVO II STANDARD 21500759100